Module:3

Architecture of Special Purpose Computing System

ATM, Handheld devices, Data Compressor, Image Capturing Devices–Architecture and Requirements, Challenges & Constraints of special purpose computing system.

Selecting The Right Processor

- Is it available in a suitable implementation?
  - What good is choosing the highest performing processor if the cost of goods makes your product noncompetitive in the marketplace?
- Is the Processor Capable of Sufficient Performance?
  - Processor must be able to do the job on time.

Selecting The Right Processor

- Is the Processor Supported by an Appropriate Operating System?
- Is the Processor Supported by Appropriate and Adequate Tools?
- Is it available in a suitable implementation?
- Is the Processor Capable of Sufficient Performance?

Selecting The Right Processor

- Is the Processor Supported by an Appropriate Operating System?
  - Porting the RTOS kernel to a new or different microprocessor architecture and having it specifically optimized to take advantage of the low-level performance features of that microprocessor is not a task for the faint-hearted.
- Is the Processor Supported by Appropriate and Adequate Tools?
  - Good tools are critical to project success.
  - At a minimum, you'll need a good crosscompiler and good debugging support.

PROCESSOR SELECTION CRITERIA

- To design an efficient embedded system, selection of right processor is very important and challenging task
- Types of processors: µP, µC, Digital signal processor (DSP)
- µP are offered in 4 to 64-bit size with distinct features like cost, speed, no. of CPU core, address & data line are used in simple toys to network router
- µC plays an important role in embedded system design and majorly used in low-end to high-end control applications
- DSP are majorly used for high computation intensive applications such as image processing, communication devices, voice to text converter etc.,

PROCESSOR SELECTION CRITERIA

- Sequence of analysis to be made selecting an appropriate processor for embedded system applications as follows,

1. **Application requirement analysis:** understand the purpose of application and arrive specific requirement

2. **Processor Architecture analysis:** MCS51, ARM, PIC, PowerPC, MIPS etc.,

3. **Peripheral set analysis:** Includes on-chip (RAM, ROM ,I/O Ports, ADC) and specialized processing units (FPU, MMU, DMA)

4. **Technical analysis:** Execution speed, operating voltage, power consumption, and data & address bus size etc.,

5. **Non-technical analysis:** Cost, software tools, package type, vendor reputation, support etc.,

ATM

OBJECTIVE: -

To provide customers with a secure and easy way to access their bank accounts and perform transactions.

To allow customers to withdraw cash, check their account balance, and transfer money.

To provide customers with a convenient way to deposit money into their account.

Here's a basic flow chart of an embedded system in an ATM:

User inserts the ATM card.

The card reader checks the card for validity and authenticity.

If the card is valid, the user is prompted to enter their Personal Identification Number (PIN).

The user enters their PIN using the keypad.

The ATM verifies the PIN and grants access to the account.

The user selects the transaction they want to perform, such as cash withdrawal, account balance check, or funds transfer.

The ATM communicates with the bank's computer system to process the transaction.

If the transaction involves dispensing cash, the ATM dispenses the requested amount of cash.

The ATM prints a receipt for the transaction, which includes details such as the amount withdrawn, account balance, and any fees charged.

The user retrieves their card and any cash dispensed.

The ATM returns to the initial state and waits for the next user.

This is a simplified flow chart of the ATM embedded system, and the actual process may involve additional steps or different sequences of operations depending on the specific ATM and bank's configuration. However, the basic operations of card reading, PIN verification, transaction processing, and cash dispensing remain the same.

COMPONENTS IN EMBEDDED SYSTEM OF ATM

The embedded system in an ATM (Automated Teller Machine) is composed of several hardware and software components that work together to enable the machine's functionality. Some of the key components of the embedded system in an ATM are:

CPU (Central Processing Unit): The CPU is the brain of the ATM and performs all the processing tasks. It executes the software program that controls the ATM and manages all the hardware components.

Card Reader: The card reader reads the magnetic stripe or chip on the ATM card and sends the card data to the CPU for processing. It also checks the card for validity and authenticity.

Keypad: The keypad allows the user to input their PIN and select the desired transaction. It contains several keys, including numeric keys and function keys for navigating the ATM menus.

Display: The display provides visual feedback to the user and displays information such as the transaction status, account balance, and instructions for using the ATM.

Cash Dispenser: The cash dispenser is the mechanism that dispenses the cash to the user during a withdrawal transaction. It includes a storage cassette for holding the cash and a dispenser mechanism for dispensing the correct amount of cash.

Receipt Printer: The receipt printer prints a receipt for the user after a transaction is completed. The receipt contains details such as the transaction amount, account balance, and any fees charged.

Network Interface: The network interface connects the ATM to the bank's computer system and allows the ATM to communicate with the bank for transaction processing and other functions.

Operating System: The ATM operating system is the software that manages the hardware components and provides the user interface for interacting with the ATM.

System Design:

Hardware: The hardware of the embedded system for an ATM includes a touch screen, a card reader, a cash dispenser, a receipt printer, and a secure keypad. The hardware components are connected to a central processing unit (CPU), which controls the overall functionality of the system.

Software: The software of the embedded system for an ATM includes an operating system, a user interface, and a transaction management system. The user interface is designed to be user-friendly and intuitive, allowing customers to easily perform transactions. The transaction management system is responsible for verifying the customer's identity, managing the flow of funds, and updating the customer's account information.

Security: The embedded system for an ATM is designed with security in mind. The system includes features such as encryption of sensitive data, two-factor authentication, and a secure keypad for entering passwords. In addition, the system is regularly updated with the latest security patches to protect against potential security threats.

Implementation:

Installation: The embedded system for an ATM is installed at bank branches, retail outlets, and other convenient locations.

Training: Bank employees are trained on how to use the system and how to assist customers with transactions.

Maintenance: The embedded system for an ATM is regularly maintained to ensure that it is functioning properly and to fix any issues that may arise.

PIN DIAGRAM USED IN EMBEDDED SYSTEM OF ATM

The pin diagram used in an embedded system of an ATM (Automated Teller Machine) may vary depending on the specific hardware and microcontroller used. However, here is a general overview of the pins typically used in an ATM system:

Power supply pins: These pins provide power to the microcontroller and other components of the ATM system.

Input/output (I/O) pins: These pins are used to interface the microcontroller with other devices such as the keypad, display, cardreader, and cash dispenser. The keypad and card reader typically use digital I/O pins, while the display and cash dispenser may use serial or parallel communication protocols.

Communication pins: These pins are used to communicate with external devices such as the bank's server, the card processing network, and the ATM's network interface. These pins may include serial communication interfaces such as UART, SPI, or I2C.

Interrupt pins: These pins are used to trigger an interrupt in the microcontroller when a specific event occurs, such as a button press or card insertion.

Clock and timing pins: These pins are used to synchronize the operation of the microcontroller and other components in the ATM system.

Reset pin: This pin is used to reset the microcontroller and other components in the ATM system. Again, the specific pin diagram used in an ATM system may vary depending on the hardware and microcontroller used. It's important to refer to the datasheet and documentation of the specific components in use for an accurate pin diagram.

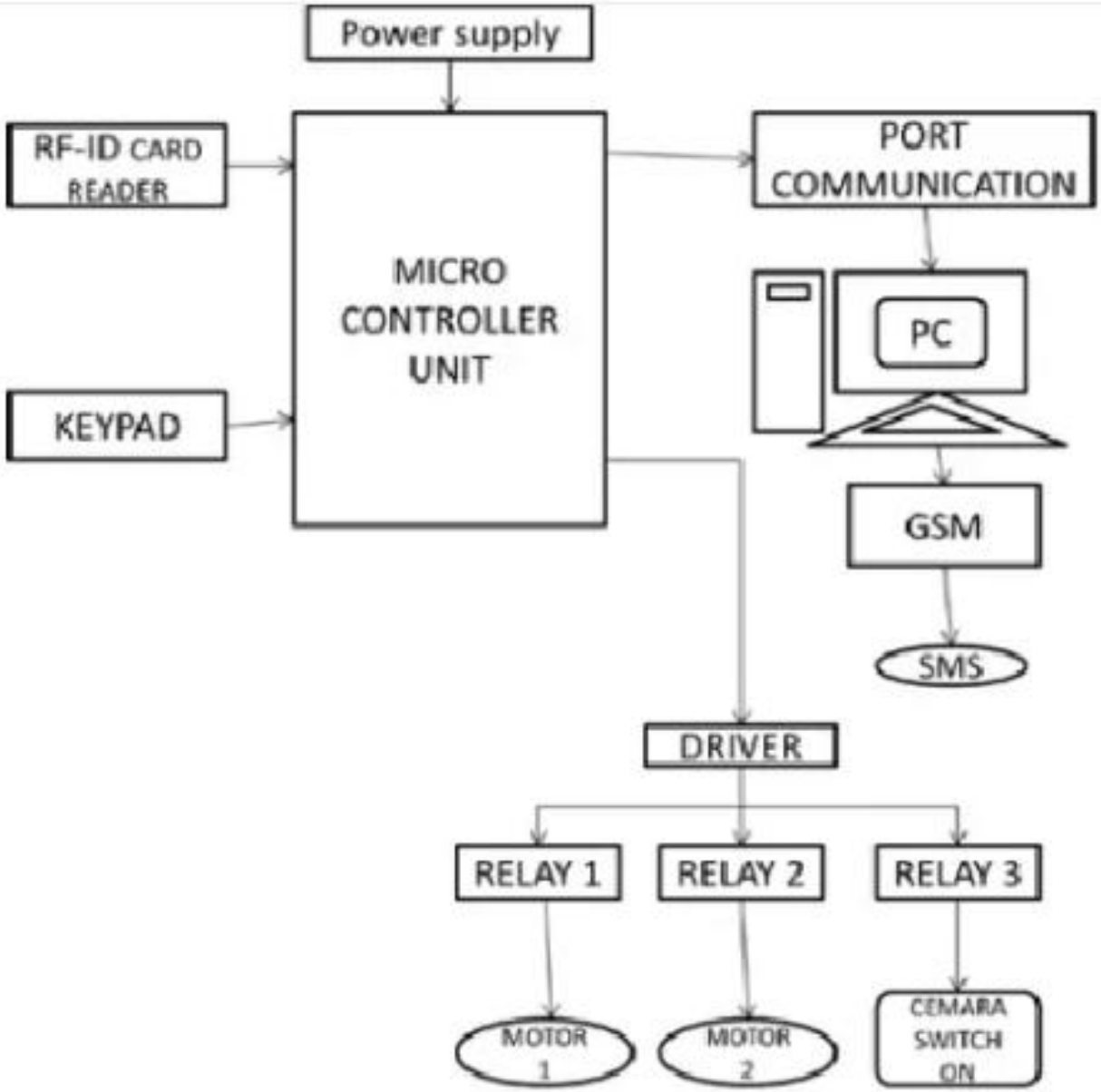
Power supply
RF-ID CARD READER
MICRO CONTROLLER UNIT
PORT COMMUNICATION
PC
KEYPAD
GSM
SMS
DRIVER
RELAY 1
RELAY 2
RELAY 3
MOTOR 1
MOTOR 2
CEMARA SWITCH ON

ATM – Harware

- CPU (to control the user interface and transaction devices)
- Magnetic and/or Chip card reader (to identify the customer)
- PIN Pad (similar in layout to a Touch tone or Calculator keypad), often manufactured as part of a secure enclosure.
- Secure cryptoprocessor, generally within a secure enclosure.
- Display (used by the customer for performing the transaction)
- Function key buttons (usually close to the display) or a Touchscreen (used to select the various aspects of the transaction)
- Record Printer (to provide the customer with a record of their transaction)
- Vault (to store the parts of the machinery requiring restricted access)
- Housing (for aesthetics and to attach signage to)

ATM – Vaults

- Dispensing mechanism (to provide cash or other items of value)
- Deposit mechanism (to take items of value from th
- Security sensors (Magnetic, Thermal, Seismic)
- Locks (to ensure controlled access to the contents

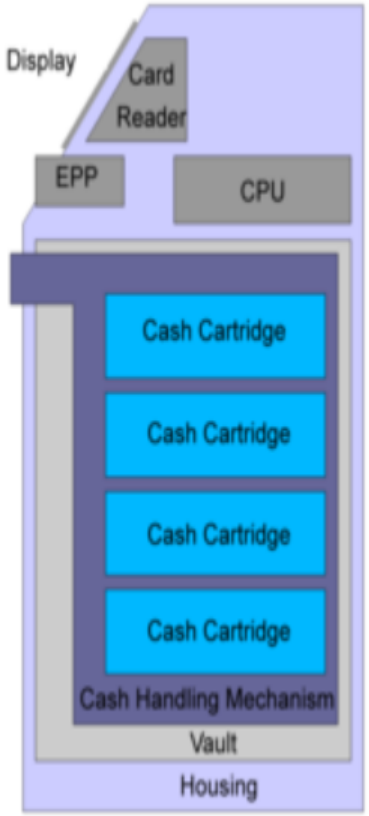

ATM – Networking

- The internet service provider (ISP) also plays an important role in the ATMs.
- This provides communication between ATM and host processors.
- When the transaction is made, the details are input by the cardholder.
- This information is passed on to the host processor by the ATM.
- The host processor checks these details with an authorized bank.
- If the details are matched, the host processor sends the approval code to the machine so that the cash can be transferred.)

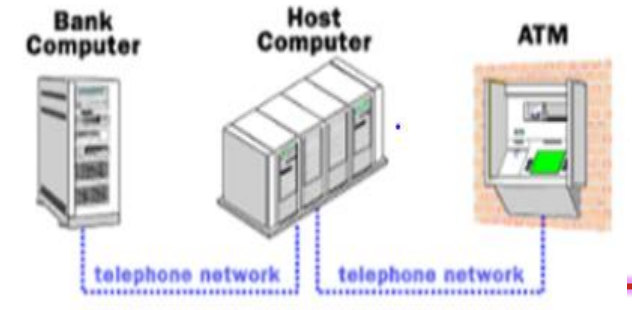

SOFTWARE REQUIREMENTS: -

Real-time operating system (RTOS): The embedded system of an ATM typically uses a real-time operating system (RTOS) to manage hardware and software components. An RTOS is designed for real-time applications and is optimized for tasks such as process scheduling, interrupt handling, and memory management.

Device drivers: The embedded system of an ATM requires device drivers to interface with various hardware components such as the card reader, keypad, and cash dispenser. These drivers allow the RTOS to communicate with the hardware and control its operation.

Middleware: The ATM's embedded system may require middleware components to handle communication between hardware and software components. Middleware provides a layer of abstraction between the RTOS and the application software, making it easier to develop and maintain the software.

Application software: The embedded system of an ATM requires application software to handle various types of transactions, such as cash withdrawals, deposits, and balance inquiries. This software typically interfaces with the user through a touch screen or keypad and communicates with the bank's servers to process transactions.

Handheld devices

Handheld Definition

- Extremely portable, self-contained information management and communication devices.
- Small size and light weight, often made up of a single component.
- Sacrifices for mobility are less memory and little or no storage, small displays, and slow, unreliable access to the Internet.

Handheld Definition

In addition, handheld devices must be able to

- Operate without cables, (except temporarily recharging, synchronizing with a desktop).
- Be easily used while in one's hands
- Must allow the addition of applications or support Internet Connectivity.

Handheld Device

Wireless Spot Billing Machine

Handheld Vs. Desktop

Handheld

- On-the-go lookup and entry of information.
- Form Factor : less than 10” x 12”
- Mobility : Can be used while on the go
- Connectivity: Slow and unreliable
- Input: Stylus, keypad, mini-keyboard, roller-wheel.
- Display Size: 240 x 320 pixels or less.
- Memory: Up to 16 megabytes.
- Storage: Sometimes none. Removable memory stick.

Handheld Vs. Desktop

Desktop

- Lengthy information processing tasks.
- Form Factor: Requires a table.
- Mobility: Requires a power cord, or frequent recharges
- Connectivity: Fast and reliable.
- Input: Full keyboard and mouse.
- Display size: 640 x 480 pixels or more.
- Memory: Up to 1 gigabyte.
- Storage: Diskettes, CDRW, DVD RAM rewritable media.

Types of Handheld Devices

There are three essential types of handheld devices:

- Mobile telephone handsets
- Pagers
- PDAs

All handheld devices share two common challenges:

- Small display
- Problematic data input.

Handheld Phones

- Primary use - Voice communication
- Data connectivity via WAP (Wireless Application Protocol) or i-mode.
- Data is entered on a standard twelve-key keypad, with the help of various soft keys.
- Bitmap graphics or user interface ‘widgets’ such as menus, text entry fields are not supported in WAP implementations.
- WAP applications are also extremely inconsistent with each other.

PDAs

- Primary use – Information storage and retrieval.
- Support address books, calendars, to-do lists, email management, and note taking.
- Have touch screens and use a stylus for input.
- User Interface Environments – Palm OS, Windows CE

PDAs

- Palm OS – Simple to use, but functionality limited. Lacks a central file system.
- Windows CE – Multitasking Operating System for handheld devices. Operates like a miniaturized version of Windows. Supports a central file system.

Pagers

- Primary use – two-way email communication.
- Also support Web browsing.
- Have QWERTY keypads.
- User Interface Environments – RIM OS, Wisdom OS.
- RIM OS – simple graphical design, mostly text and icons.
- Wisdom OS – rich graphical interface supporting graphical controls such as radio buttons and check boxes.

Qwerty Keypad

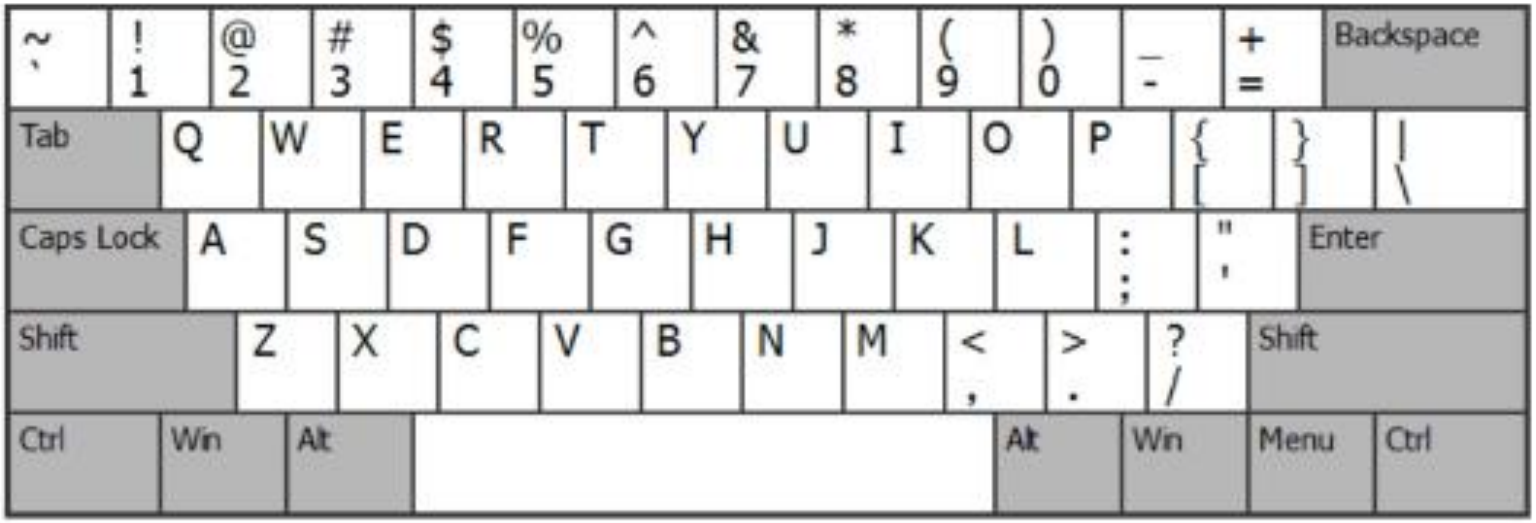

The QWERTY keyboard layout was invented in the 1870s by Christopher Latham Sholes to prevent typewriter keys from jamming. It remains the most widely used keyboard layout today. The reason why the keys on a computer keyboard are not arranged in alphabetical order is because of the way the keyboard was designed.

User Interface Design Guidelines for Handheld Devices

1. ‘Select’ Vs. ‘Type’

- Typing on handheld devices is extremely difficult.
- Alternative input methods - Graffiti handwriting recognition software and on-screen keyboards.
- So when possible, offer a selection mechanism rather than requiring typing.

Design Guidelines

2. Design for Small Screen

- Small screens are difficult to use.
- A fundamental requirement is that content be contiguous without blank lines.

3. Consistency

- Use of same terminology and interaction schema within the same application and between applications reduces the learning curve for new features.

Design Guidelines

4. Design Stability

- Wireless data connections are prone to failure.
- So it is critical that the applications provide a stable user interface.
- ‘Stability’ implies that when the network connection drops, the application should restore state and context once the network goes back online.
- The network could be unstable, but the design need not be.

Design Guidelines

5. Providing Feedback

- Each page of an application should provide the user with enough information to understand what the application is and how to navigate from the page.

6. Forgiveness

- If a user makes a mistake, the user interface must offer means to correct it.
- Use ‘Back’ button or ‘Undo’ button.

Summary

- Handheld devices are extremely portable, self-contained information management and communication devices.
- The three types of handheld devices are mobile handsets, pagers and PDAs.
- The user interface design guidelines must be considered while designing handheld devices.

Handheld Device

Application Spot Billing Machine

- Electricity and Water Billing
- Cable and Internet Billing
- Canteen and Hotel Billing
- Finance and Daily Bill Collection
- Bus and Parking Ticketing
- Distribution and Retail Billing
- Petrol and Toll Gate Tokens
- All kinds of General Billing

Handheld Device

Block Diagram

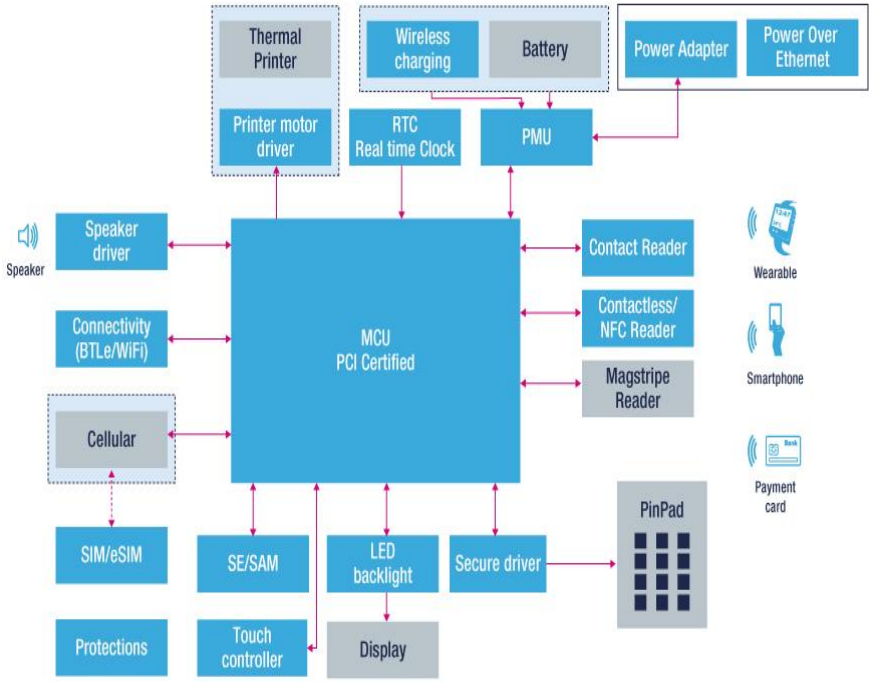

Handheld Device

Features of Spot Billing Machine

- Billing Machine is easy to operate and user-friendly.
- It is highly secured with Password protection.
- It is accessible to the remote application via GPRS.
- It holds the Customer Data in memory.
- Accurate data Import and Export Settings

Handheld Device

Specification

Processor : ARM 32-bit Cortex-M3 CPU(120 Mhz max)with Adaptive real-time accelerator (ART Accelerator), capable of In-System Programming. On The Fly Programming(Can be done in the field using laptop)for Upgrading the units through Serial/USB Ports. Choice of Program Memory Capacity of 512K/1024K bytes.

Memory : 8 MB of Non-volatile data memory is provided with the units data retention is minimum 10 years with out any power being applied.
Expandable to 16 MB
Optional - It also has micro SD card slat for large memory backup.
Real Time Clock : In-built Real time clock with battery backup.
Key-Board : A 35 key multi function key board is provided on the front panel.
LC Display : 132*64 pixels graphical LCD display with back light provided for user interaction. It has various graphical icons for indication of battery status, signal status etc.

Processor

- The Cortex-M3 processor is specifically developed for high-performance, low-cost platforms for a broad range of devices including microcontrollers, automotive body systems, industrial control systems and wireless networking and sensors

PROCESSOR SELECTION CRITERIA

Case study-1: Handheld Device

Processor

Architecture	Armv7-M
Bus Interface	3x AMBA AHB-Lite interface (Harvard bus architecture) AMBA ATB interface for CoreSight debug components
ISA Support	Thumb/Thumb-2 subset
Pipeline	Three-stage
Memory Protection	Optional 8 region MPU with sub regions and background region
Bit Manipulation	Integrated Bit-field Processing Instructions and Bus Level Bit Banding
Interrupts	Non-maskable Interrupt (NMI) + 1 to 240 physical interrupts
Interrupt Priority Levels	8 to 256 priority levels
Wake-up Interrupt Controller	Optional
Enhanced Instructions	Hardware Divide (2-12 Cycles), Single-Cycle (32x32) Multiply, Saturated Adjustment Support
Sleep Modes	Integrated WFI and WFE Instructions and Sleep On Exit capability. Sleep and Deep Sleep Signals Optional Retention Mode with Arm Power Management Kit

Case study-1: Handheld Device

Nested Vector Interrupt

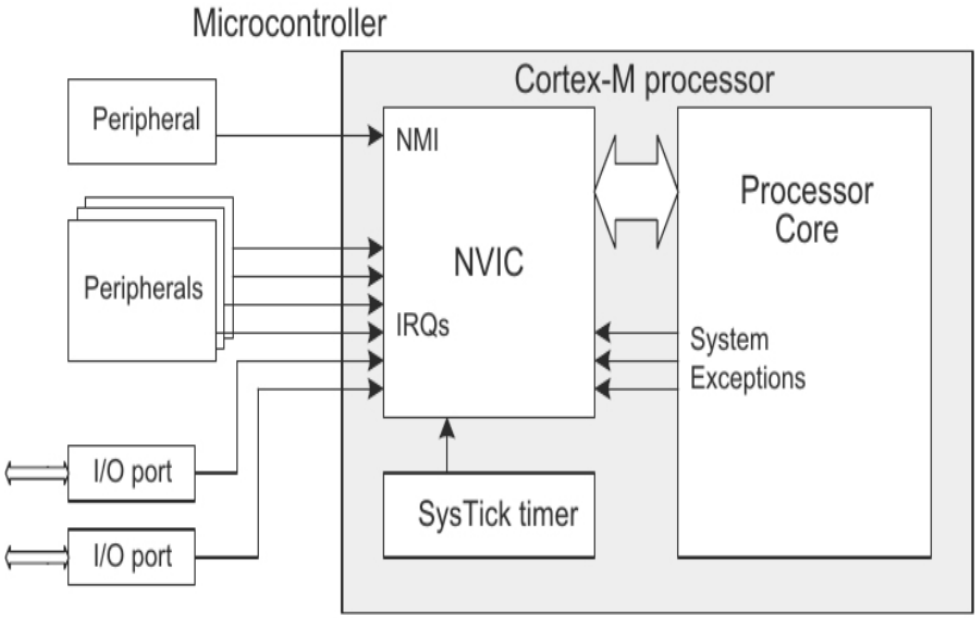

Nested Vector Interrupt

- Nested vector interrupt control (NVIC) is a method of prioritizing interrupts, improving the MCU's performance and reducing interrupt latency.

- NVIC also provides implementation schemes for handling interrupts that occur when other interrupts are being executed or when the CPU is in the process of restoring its previous state and resuming its suspended process.

Handheld Device

Specification

Printer : High Speed 24 Column Impact Printer With 2.7 Lines/Sec, is Provided as Standard fitment.

Paper Roll : 57.5mm+/-0.5mm,60mm dia Paper Roll Fitment.

Communication : a) RS232C Ports-1 Nos(Option of second port)with flexible baud rates.

b) Optional IR or IRDA or Both IR or IRDA Port for Communication with electricity meters.

d) Built-in GSM/GPRS modem optional.

e) Optional GPS.

Smart Card Interface : Optional Contact & Contact less(MIFARE)Smart Card Interface.

Batteries : The units are powered by 7.4v 2600 mAH LI-ION Rechargeable Battery pack.

Battery Charger : External Universal voltage AC/DC 9.7V-2Amp Adaptor provided.

Mechanical Dimension : Width-102.00,Length-276.00,Height-82.00.

Weight : Weight-655grams~(without paper roll).

FEATURES AND FUNCTIONALITIES

Fast/Relevant.

Firmware Easily Upgrade.

Compact Bill Format.

User Friendly alphanumeric Display.

Allow the Remote Request when GPRS enabled.

Rugged Construction.

Includes all Necessary Installation Hardware.

Management Reports.

User Wise Collection Reports.

Rugged Handheld Data Terminal

- It is built for life out in the field, integrates Corning Gorilla glass for display, able to handle drops, bumps, spills, dust, vibration.

- With stable wireless connections and accurate efficient data capture options, you can find this easy-to-deploy device a valuable helper to increase productivity in logistics, express delivery, warehousing, retail and industrial manufacture etc.

DIGITAL CAMERA

The Digital camera may have different requirements. It may be :

- Single-functioned -- It is just a simple digital camera.
- Tightly-constrained -- The digital camera also has low cost, low power consumption, compact size and high speed.
- Reactive and real-time -- This type of camera must continuously react to changes in system environment and must compute certain results in real time without delay.

DESIGNER'S PERSPECTIVE

From the designer's perspective a simple digital camera is capable of performing two key tasks.

The first task involves capturing the images and when the shutter is pressed the captured image is converted to a digital form using a charge-coupled device (CCD)). Then the digital format images are compressed and archived in the internal memory.

The second task involves uploading the images to the PC. This process is implemented by attaching the digital camera to the PC and giving special software commands to transmit the images serially from camera to PC.

DESIGN METRICS

The design metrics of importance are based on the initial specification and are typically the following:

Performance: The time required to process the image.

Size: The number of elementary logic gates (2-input NAND gate) in Integrated Chip.

Power: The measure of average electrical energy consumed while processing the system.

Energy: The possible battery lifetime (power x time).

Performance The performance of the system can be improved by processing the image as fast as possible. It would be useful to have 1sec as a reasonable constraint. If the system is slower than this value, it may be annoying. Sometimes high speed is not necessary for the low-end market. Therefore, this must be a constrained metric.

Size The system should use ICs that must fit into a reasonable sized (handy) camera.

The camera system may support up to 200,000 gates, but smaller would be cheaper.

Power The system must operate below certain temperature (cooling fan not possible). Therefore, it is also a constrained metric.

Energy Both the power consumption and time must be reduced to reduce the energy (power X time)

HARDWARE SPECIFICATIONS

Controllers, LCD display, Switches and buttons

A set of controllers– to control shutter, flash, auto focus and eye-ball image control.

LCD display for graphics and GUI

Switches and buttons for inputs at camera.

User gives commands for switching on the camera, flash, shutter, adjust brightness, contrast, color, save and transfer.

When a button for opening the shutter is pressed, a flash lamp glows and a self-timer circuit switches off the lamp automatically

PURPOSE

Digital recording and display of pictures

Processing to get the pictures of required brightness, contrast and color. Permanent saving of picture in file in a standard format at a flash-memory stick or card

Transfer files to a computer and printer through a USB port

PURPOSE OF EMBEDDED SYSTEM IN DIGITAL CAMERA

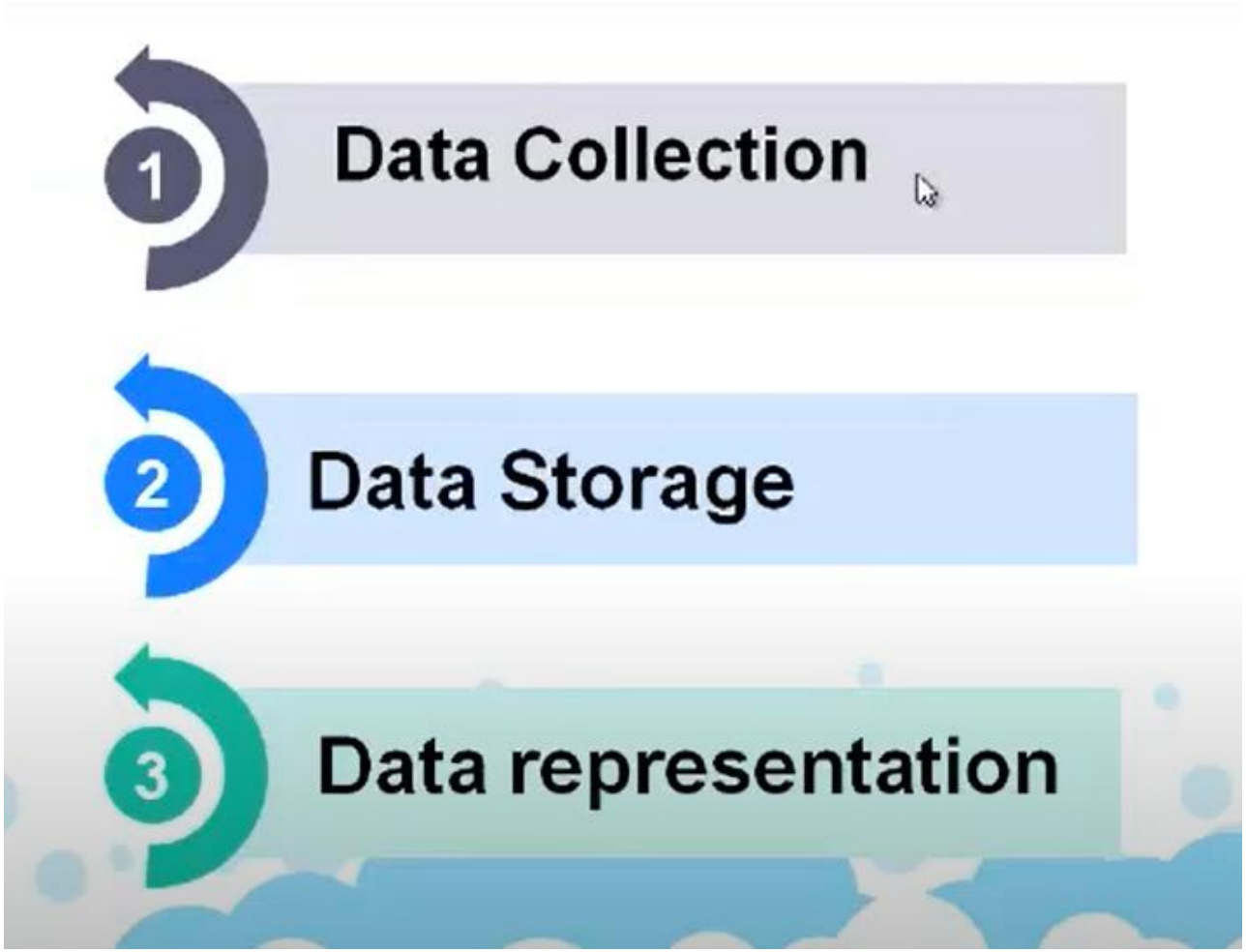

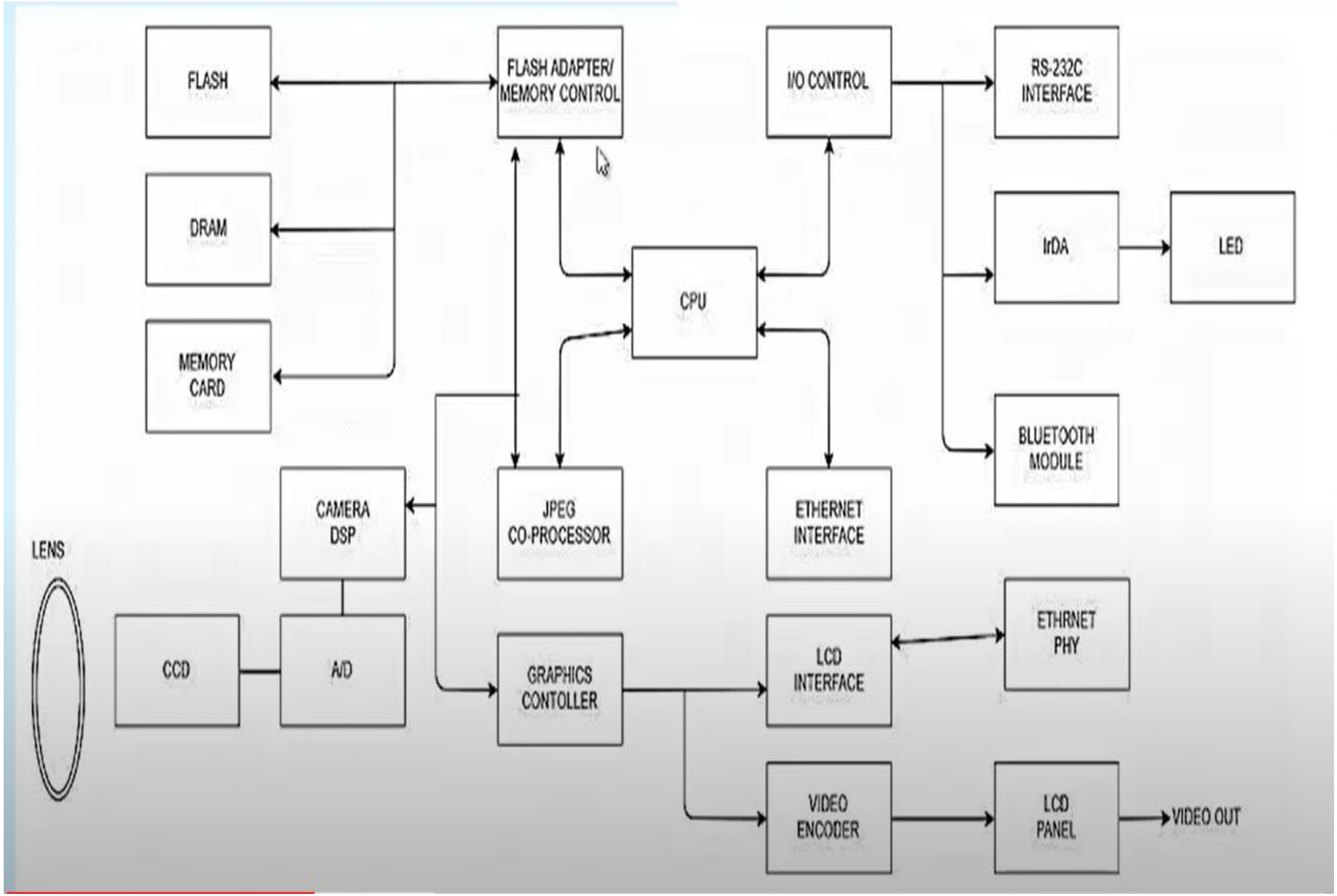
FLASH
FLASH ADAPTER/ MEMORY CONTROL
I/O CONTROL
RS-232C INTERFACE
DRAM
IrDA
LED
CPU
MEMORY CARD
BLUETOOTH MODULE
CAMERA DSP
JPEG CO-PROCESSOR
ETHERNET INTERFACE
LENS
ETHRNET PHY
CCD
A/D
GRAPHICS CONTOLLER
LCD INTERFACE
VIDEO ENCODER
LCD PANEL
VIDEO OUT

CCD-HEART OF DIGITAL CAMERA

A charge-coupled device (CCD) is a device for the movement of electrical charge, usually from within the device to an area where the charge can be manipulated, such as conversion into a digital value.

In a CCD image sensor, pixels are represented by p-doped metal–oxide–semiconductor (MOS) capacitors

Although CCDs are not the only technology to allow for light detection, CCD image sensors are widely used in professional, medical, and scientific applications where high-quality image data are required

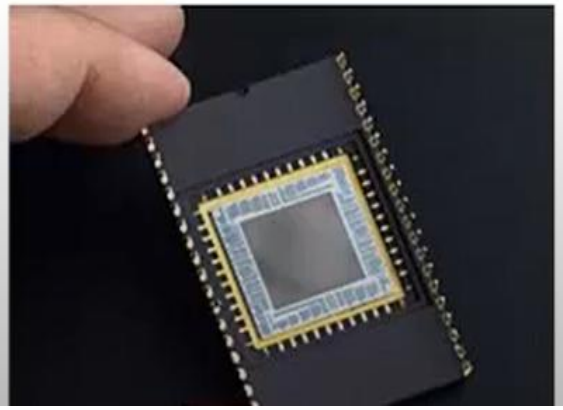

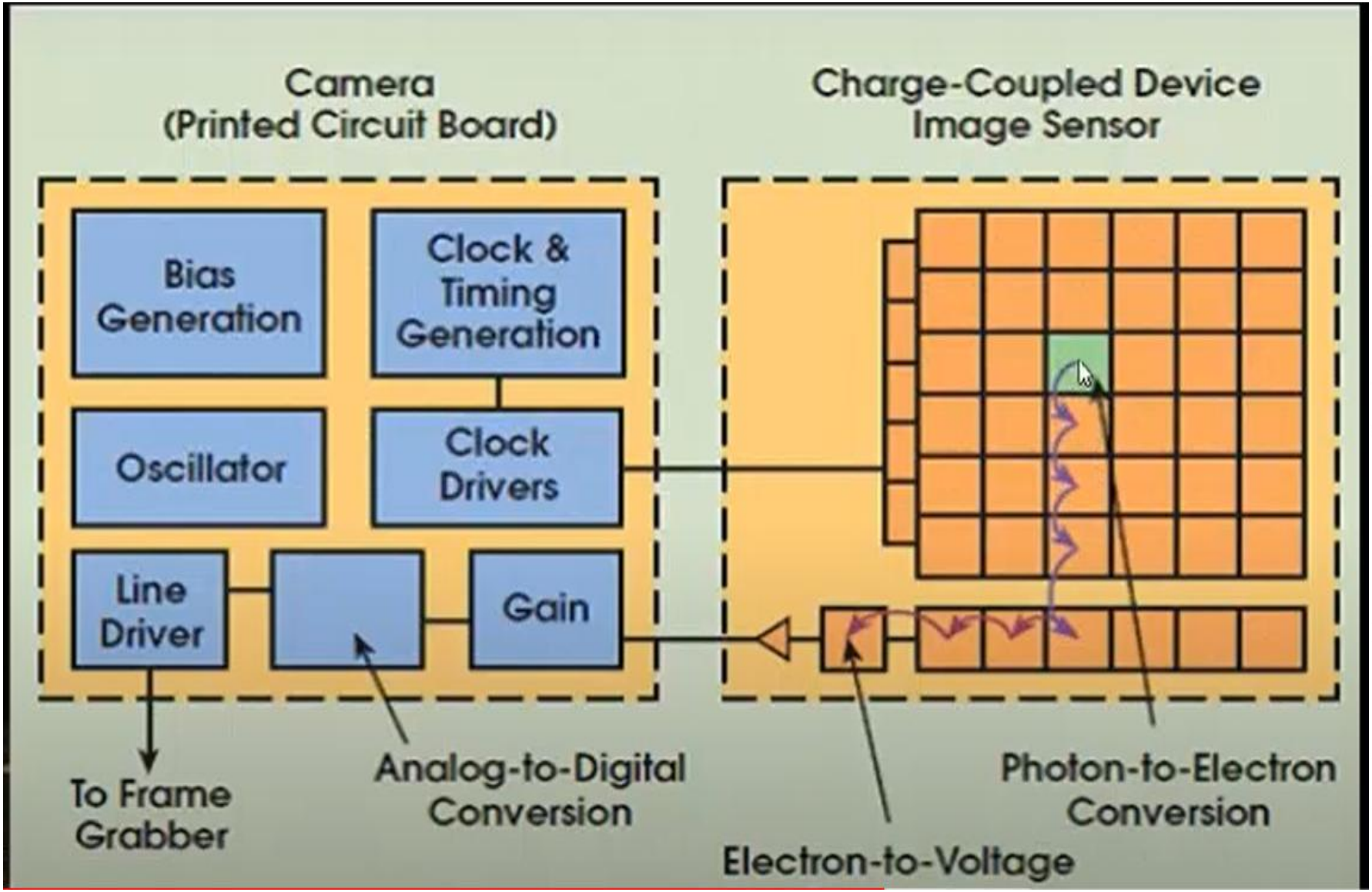
Camera
(Printed Circuit Board)
Charge-Coupled Device
Image Sensor
Bias
Generation
Clock &
Timing
Generation
Oscillator
Clock
Drivers
Line
Driver
Gain
To Frame
Grabber
Analog-to-Digital
Conversion
Electron-to-Voltage
Photon-to-Electron
Conversion

TWO KEY TASK

Processing the image and storing in memory

- When shutter pressed
- Image captured
- Convert to digital from CCD
- Compressed and stored in memory

Uploading Image to PC

- Camera connected to PC
- Software command to transfer the data serially.

Points to be High Lighted

❖Digital camera includes various types of memories like DRAM, memory card, flash memory with controller etc.

❖The CPU is the main processor is also connected with the various other processors. The host processor just controls the various operations and the complicated operations are performed by these task processors.

❖The JPEG co-processor is mainly meant to compress and decompose image into JPEG format.

❖The camera DSP processes the images taken by CCD camera after it is converted to digital form. A graphics processor is also connected to do graphics processing for displaying the images and videos from the memory either on the LCD panel through the LCD controller interface or to the video out after video encoding.

❖ The IrDA interface is provided for remote controlling of the camera through the infrared remote. An Ethernet interface is given for Ethernet connection. There are other interfaces like RS232 and Bluetooth for advance communication support.

Data Compression

Why Data Compression?

- Make optimal use of limited storage space

- Save time and help to optimize resources
  - If compression and decompression are done in I/O processor, less time is required to move data to or from storage subsystem, freeing I/O bus for other work
  - In sending data over communication line: less time to transmit and less storage to host

Data Compression- Entropy

- Entropy is the measure of information content in a message.
  - Messages with higher entropy carry more information than messages with lower entropy.
- How to determine the entropy
  - Find the probability ***p(x)*** of symbol ***x*** in the message
  - The entropy ***H(x)*** of the symbol x is:

$$H(x) = -\,p(x) \cdot \log_2 p(x)$$

- The average entropy over the entire message is the sum of the entropy of all n symbols in the message

Data Compression Methods

- Data compression is about storing and sending a smaller number of bits.
- There're two major categories for methods to compress data: lossless and lossy methods

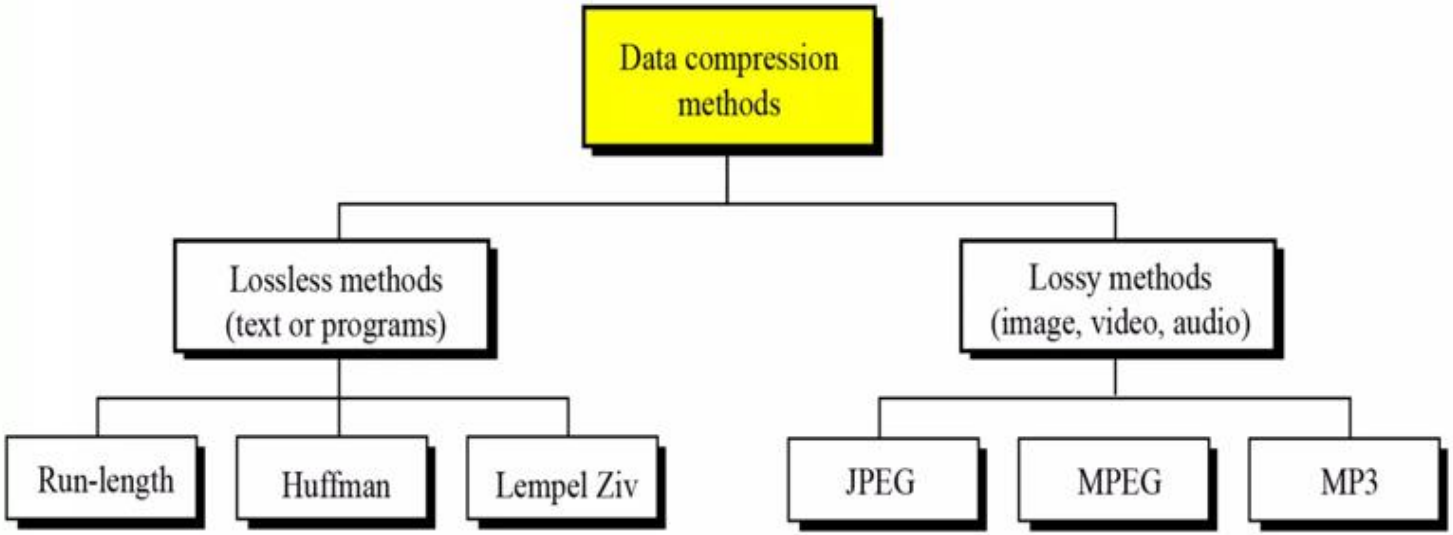

Lossless Compression Methods

- In lossless methods, original data and the data after compression and decompression are exactly the same.
- Redundant data is removed in compression and added during decompression.
- Lossless methods are used when we can't afford to lose any data: legal and medical documents, computer programs.

Run-length encoding

- Simplest method of compression.
- How: replace consecutive repeating occurrences of a symbol by 1 occurrence of the symbol itself, then followed by the number of occurrences.

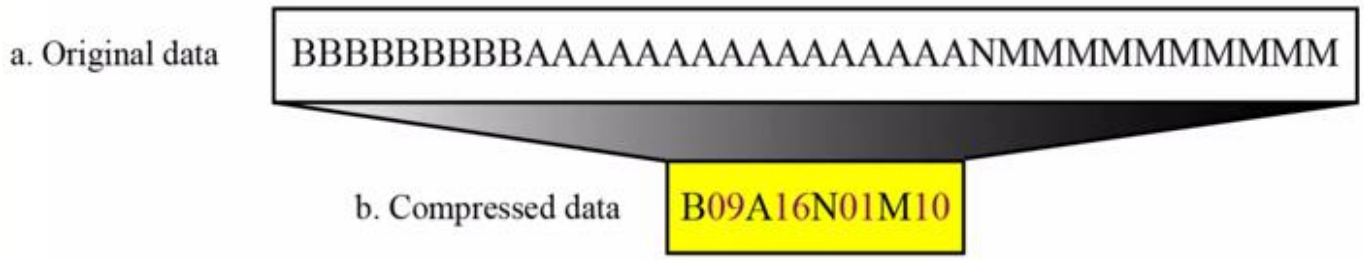

- The method can be more efficient if the data uses only 2 symbols (0s and 1s) in bit patterns and 1 symbol is more frequent than another.

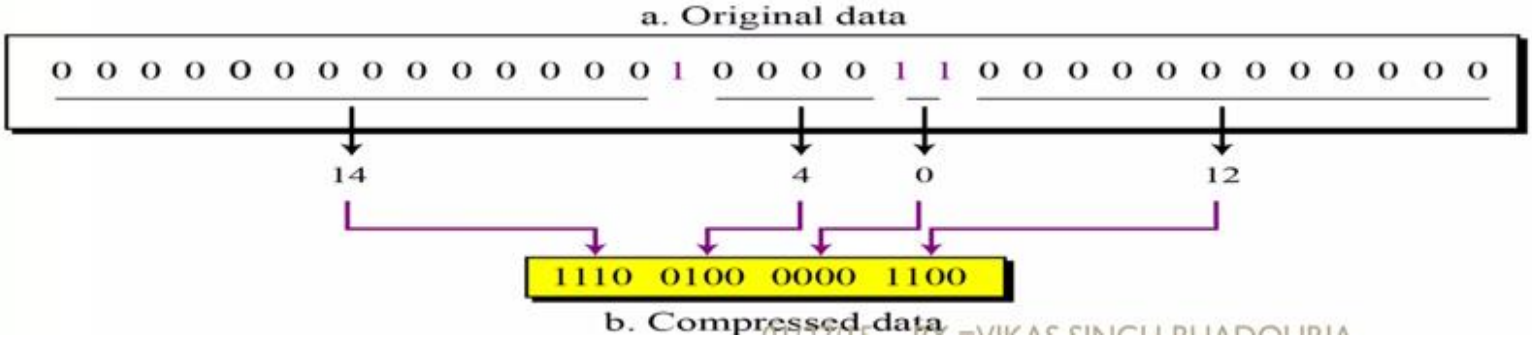

Huffman Coding

- Assign fewer bits to symbols that occur more frequently and more bits to symbols appear less often.
- There's no unique Huffman code and every Huffman code has the same average code length.
- Algorithm:

a. Make a leaf node for each code symbol
   - Add the generation probability of each symbol to the leaf node

a. Take the two leaf nodes with the smallest probability and connect them into a new node
   - Add 1 or 0 to each of the two branches
   - The probability of the new node is the sum of the probabilities of the two connecting nodes

a. If there is only one node left, the code construction is completed. If not, go back to (2)

- Example

Table 15.1 Frequency of characters

Character	A	B	C	D	E
Frequency	17	12	12	27	32

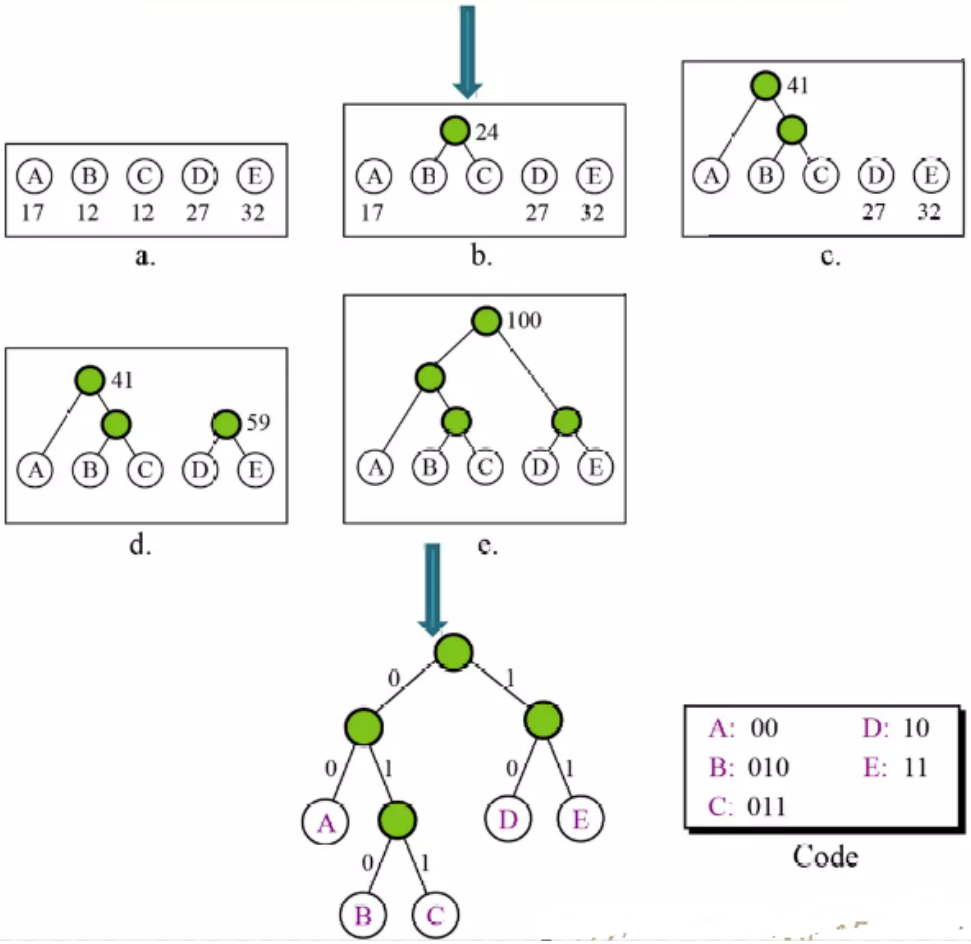

Huffman Coding

- Encoding

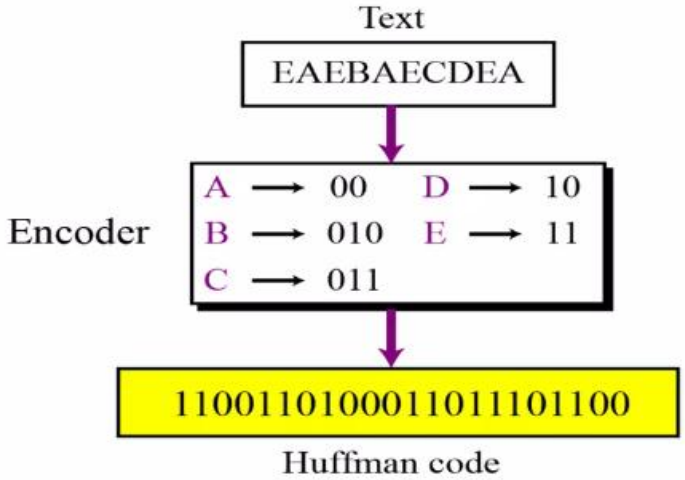

- Decoding

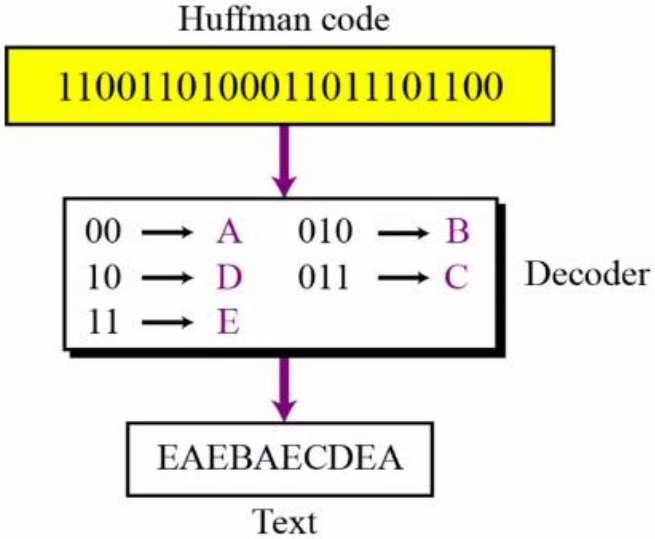

Lempel Ziv Encoding

- It is *dictionary-based* encoding

- Basic idea:
  - Create a dictionary(a table) of strings used during communication.
  - If both sender and receiver have a copy of the dictionary, then previously-encountered strings can be substituted by their index in the dictionary.

Lempel Ziv Compression

- Have 2 phases:
  - Building an indexed dictionary
  - Compressing a string of symbols
- Algorithm:
  - Extract the smallest substring that cannot be found in the remaining uncompressed string.
  - Store that substring in the dictionary as a new entry and assign it an index value
  - Substring is replaced with the index found in the dictionary
  - Insert the index and the last character of the substring into the compressed string

Lempel Ziv Compression

- Compression example:

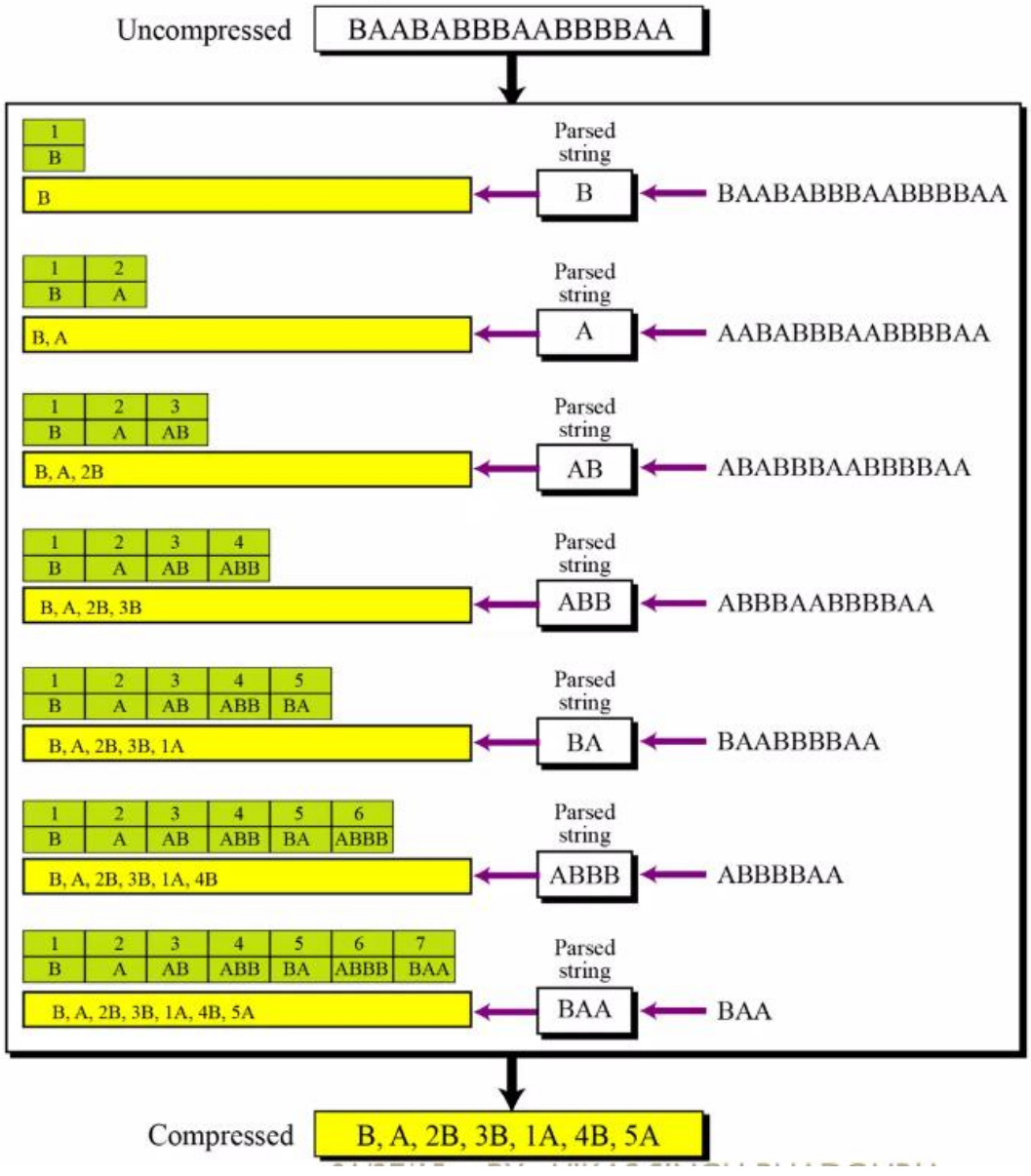

Lempel Ziv Decompression

- It's just the inverse of compression process

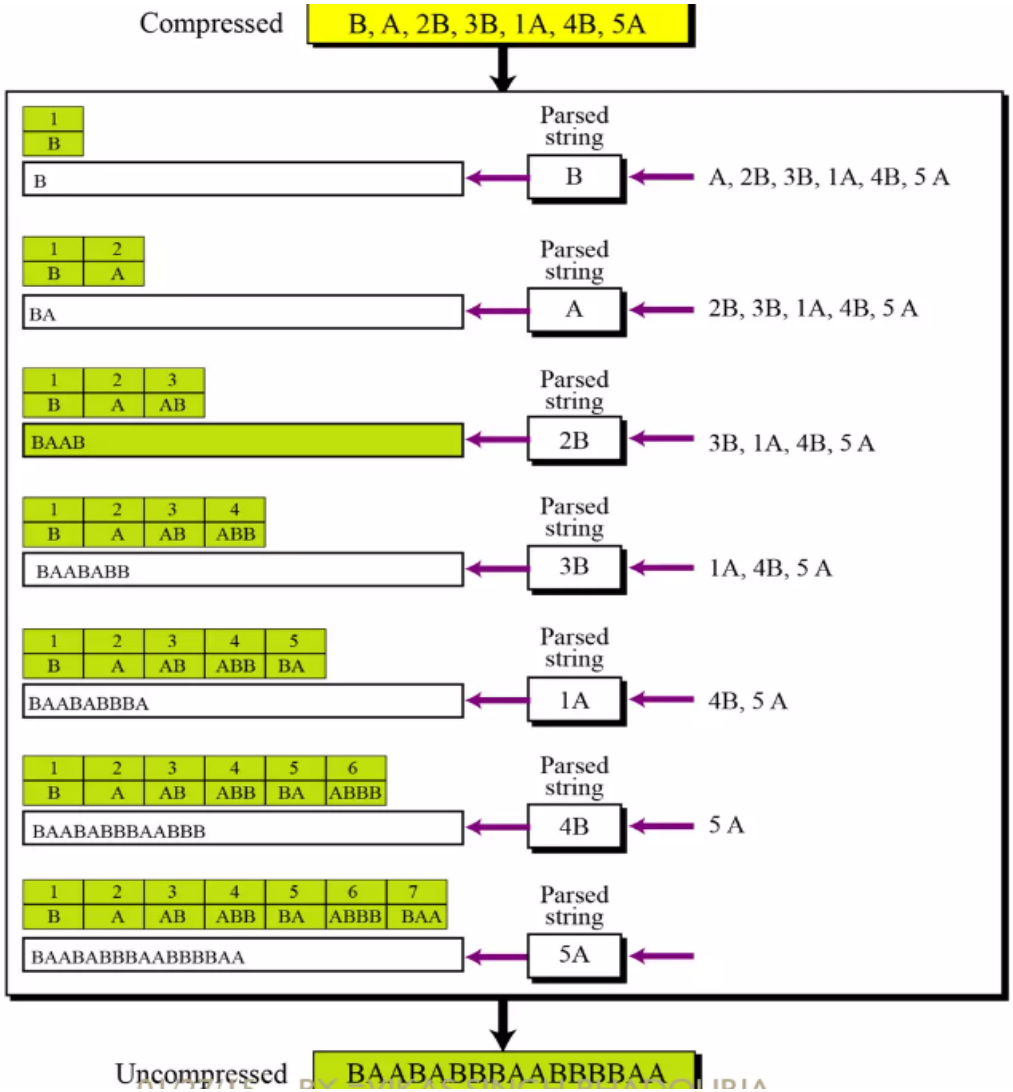

ABCABCABC

Parsed: A → (0,A)
Dictionary: 1:A

Parsed: B → (0,B)
Dictionary: 2:B

Parsed: C → (0,C)
Dictionary: 3:C

Parsed: AB → (1,B)
Dictionary: 4:AB

Parsed: CA → (3,A)
Dictionary: 5:CA

Parsed: BC → (2,C)
Dictionary: 6:BC

(0,A), (0,B), (0,C), (1,B), (3,A), (2,C)

Lossy Compression Methods

- Used for compressing images and video files (our eyes cannot distinguish subtle changes, so lossy data is acceptable).
- These methods are cheaper, less time and space.
- Several methods:
  - JPEG: compress pictures and graphics
  - MPEG: compress video
  - MP3: compress audio

JPEG Encoding – Numerical Example

- Numerical example of JPEG encoding using an 8×8 grayscale image block
- Includes: Level shifting, DCT, Quantization, Zig-zag, and Encoding

Original 8×8 Pixel Block

- 52 55 61 66 70 61 64 73
- 63 59 55 90 109 85 69 72
- 62 59 68 113 144 104 66 73
- 63 58 71 122 154 106 70 69
- 67 61 68 104 126 88 68 70
- 79 65 60 70 77 68 58 75
- 85 71 64 59 55 61 65 83
- 87 79 69 68 65 76 78 94

Step 1: Level Shifting

- Each pixel value is shifted by subtracting 128
- Example: $52 - 128 = -76$

- Purpose: Center pixel values around zero for DCT efficiency

Step 2: Discrete Cosine Transform (DCT)

- Converts spatial data into frequency domain
- Produces 1 DC coefficient and 63 AC coefficients

- Example DC value: –415 (represents average brightness)

DCT Coefficient Matrix (Partial)

- -415 -33 -58 35
- 5 -34 49 18
- -46 14 80 -35
- -53 21 34 -20

Step 3: Quantization

- Each DCT coefficient is divided by quantization matrix value and rounded
- This is the lossy step of JPEG compression

Quantization Example

- DCT value = –415, Quantization value = 16
- Quantized value = round(–415 / 16) = –26

- Many high-frequency coefficients become zero

Quantized Coefficient Matrix (Partial)

- -26 -3 -6 2
- 0 -3 4 1
- -3 1 5 -1
- -4 1 2 -1

Step 4: Zig-Zag Scanning

- Coefficients are rearranged in zig-zag order
- Groups low-frequency values first and zeros at the end

Step 5: Encoding

- Run-Length Encoding (RLE) compresses zeros
- Huffman coding assigns shorter codes to frequent values

- Final output: Compressed JPEG bitstream

$$\begin{bmatrix} 100 & -60 & 0 & 6 & 0 & 0 & 0 & 0 \\ 0 & 0 & 0 & 0 & 0 & 0 & 0 & 0 \\ 0 & 0 & 0 & 0 & 0 & 0 & 0 & 0 \\ 0 & 0 & 0 & 0 & 0 & 0 & 0 & 0 \\ 13 & -1 & 0 & 0 & 0 & 0 & 0 & 0 \\ 0 & 0 & 0 & 0 & 0 & 0 & 0 & 0 \\ 0 & 0 & 0 & 0 & 0 & 0 & 0 & 0 \\ 0 & 0 & 0 & 0 & 0 & 0 & 0 & 0 \end{bmatrix}$$

$$[(0,7),\ 100],\ [(0,6),\ -60],\ [(4,3),\ 6],\ [(3,4),\ 13],\ [(8,1),\ -1],\ [(0,0)]$$

Conclusion

- JPEG achieves high compression by exploiting
- • Frequency characteristics
- • Human visual perception
- • Lossy quantization + lossless entropy coding

MPEG Encoding

- Used to compress video.
- Basic idea:
  - Each video is a rapid sequence of a set of frames. Each frame is a spatial combination of pixels, or a picture.
  - Compressing video =

    spatially compressing each frame

    +

    temporally compressing a set of frames.

MPEG Encoding

- Spatial Compression
  - Each frame is spatially compressed by JPEG.
- Temporal Compression
  - Redundant frames are removed.
  - For example, in a static scene in which someone is talking, most frames are the same except for the segment around the speaker's lips, which changes from one frame to the next.

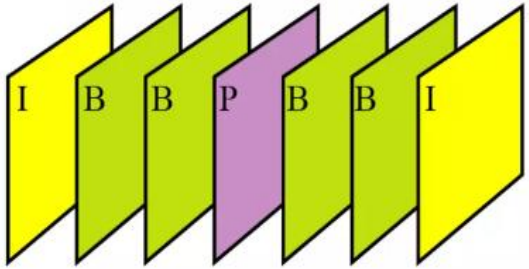

a. Frames

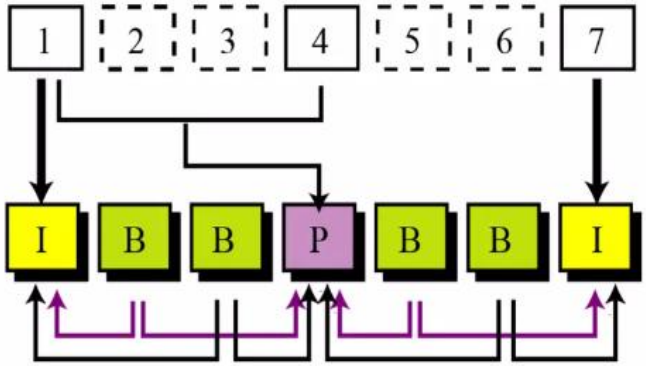

b. Frame construction

Spatial compression:
Removes redundancy within a single frame using DCT-based transform coding.
Temporal compression:
Removes redundancy between successive frames using motion estimation and motion compensation.

Audio Compression

- Used for speech or music
  - Speech: compress a 64 kHz digitized signal
  - Music: compress a 1.411 MHz signal

- Two categories of techniques:
  - Predictive encoding
  - Perceptual encoding

Input Audio Signal

↓

Sampling & Quantization

↓

Framing & Windowing

↓

Transform Coding (MDCT / DCT)

↓

Psychoacoustic Model

↓

Quantization

↓

Entropy Coding

↓

Compressed Audio Bitstream

1. Input Audio Signal

•Analog audio such as speech or music.

2. Sampling & Quantization

•Converts analog signal into digital form.

•Example: 44.1 kHz, 16-bit (CD quality).

3. Framing & Windowing

•Audio samples are divided into **small frames**.

•Windowing (Hann/Hamming) avoids discontinuities.

4. Transform Coding (MDCT)

•Converts time-domain signal into **frequency domain**.

•Similar role as **DCT in JPEG**.

5. Psychoacoustic Model

•Determines which frequency components are **audible** or **masked**.

6. Quantization (Lossy)

•Important components → finely quantized

•Masked components → coarsely quantized or removed

•Main source of compression.

7. Entropy Coding

•Lossless compression using:

- Run-Length Encoding (RLE)
- Huffman or Arithmetic coding

8. Compressed Audio Bitstream

•Final output for storage or transmission.